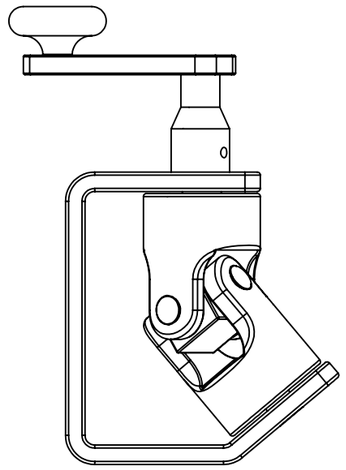

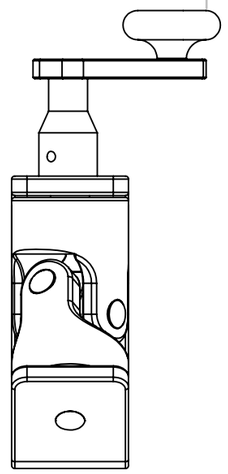

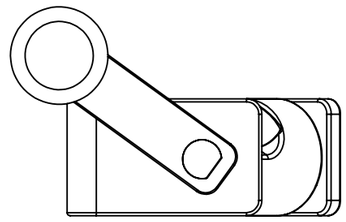

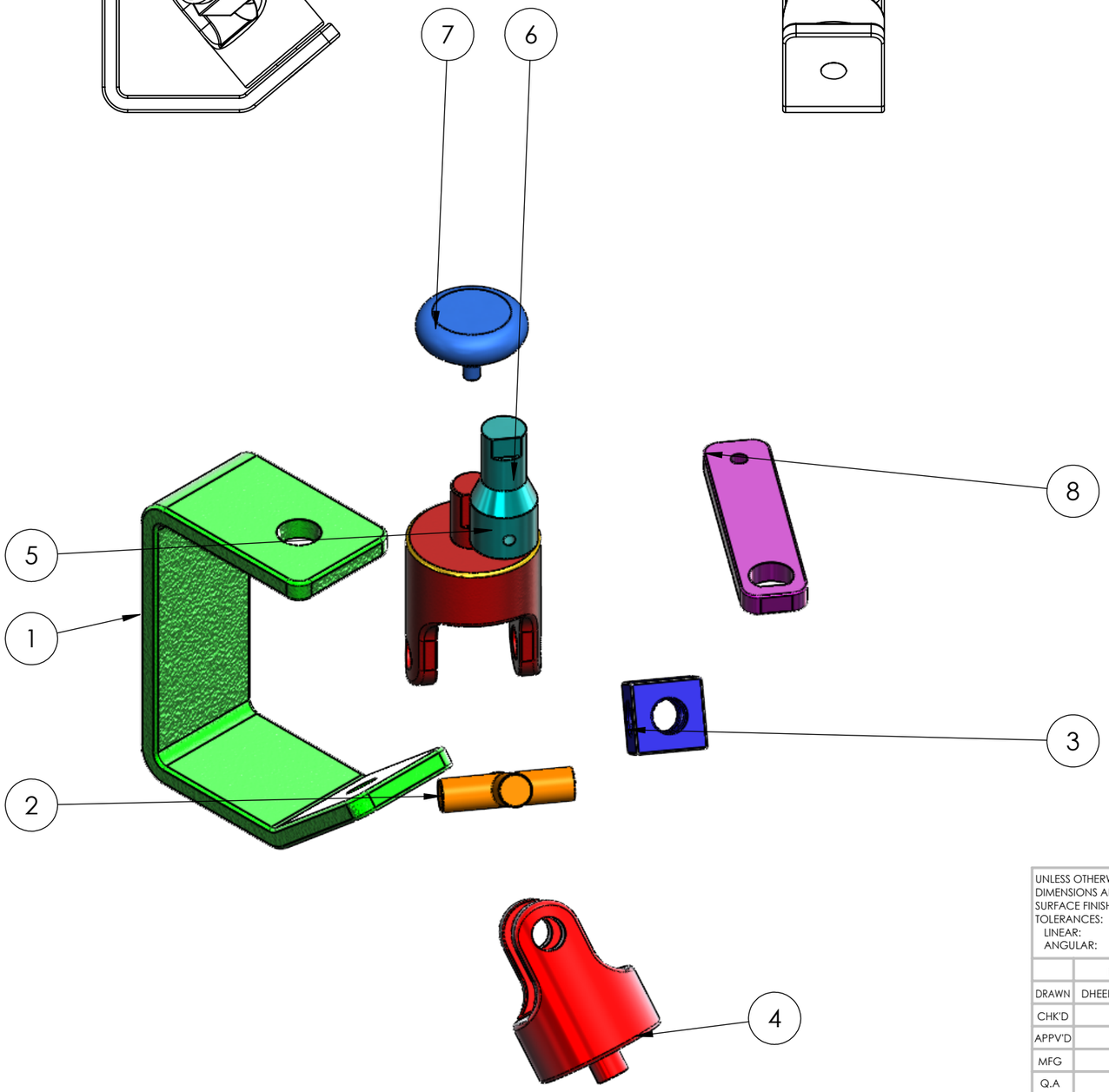

ITEM NO.	PART NUMBER	QTY.
1	Part1 Bracket	1
2	Part3 pin	1
3	Part5 centre block	1
4	Part6 fork	1
5	Part7 Fork 2	1
6	Part8 Hnadle bar	1
7	Part2 knob	1
8	Part4 handle	1

UNLESS OTHERWISE SPECIFIED:
DIMENSIONS ARE IN MILLIMETERS
SURFACE FINISH:
TOLERANCES:
LINEAR:
ANGULAR:

FINISH:

DEBURR AND BREAK SHARP EDGES

DO NOT SCALE DRAWING

REVISION

	NAME	SIGNATURE	DATE
DRAWN	DHEERAJ KUMAR		
CHK'D			
APPV'D			
MFG			
Q.A			

TITLE:

Universal Coupling

MATERIAL:

WEIGHT:

DWG NO.

A3

SCALE:1:2

SHEET 1 OF 1

SOLIDWORKS Educational Product. For Instructional Use Only.